CHAPTER (1) : Introduction

What is fluid power?

Fluid power is the use of fluids under pressure to generate, control, and transmit power. Fluid power is subdivided into hydraulics using a liquid such as mineral oil or water, and pneumatics using a gas such as air or other gases. Compressed-air and water-pressure systems were once used to transmit power from a central source to industrial users over extended geographic areas; fluid power systems today are usually within a single building or mobile machine.

While fluid power has been around for centuries, its heyday was undoubtedly sparked by the end of World War II, when countless soldiers returning to their home countries brought back their mechanical expertise and real-world experiences. The founding of many famed domestic fluid power component manufacturing companies—many still around today—can be traced to this era. In the years thereafter, some of the associations that have so shaped the industry were begun, most notably the National Fluid Power Association (1953) and the International Fluid Power Society (1960).

Fluid power systems are comprised of a myriad of components, including pumps, cylinders, valves, hose, fittings, gauges, sensors, filters, seals, and reservoirs. Some components are considered absolute necessities, while others are optional and used to refine the system for more precise operation or to increase the lifespan of the system or its individual parts. Throughout this handbook, we will detail many of the more common and widely used components, explaining their operation, their place in the system, and how an engineer should correctly specify them.

While fluid power can be used in most any industry or application, it is commonly seen in markets that include packaging, off-highway, mining, offshore/marine, medical, material handling, construction, aerospace, automation, robotics, and entertainment.
Also, fluid power is an important technology. A 2012 study by the Department of Energy discovered that between 2.0% and 2.9% of the United States' energy is transmitted through fluid power equipment. While that is an impressive statistic, the study also found that the efficiency of fluid power averages 22%.

While that percentage is low, it also illustrates how much improvement there is to make. The study concludes that a 5% improvement in efficiency over 5 years is possible by instituting best practices in industry. Or, even better, a 15% improvement

over 15 years is possible with a strategic R&D program. Doing this would save the U.S. an amazing $37 billion.

Fluid power is an amazing technology. But it's clear that understanding it better and designing our system more efficiently is of critical importance.

Hydrostatic Power Systems

In the hydrostatic power systems, the power is transmitted by increasing mainly the pressure energy of liquid. These systems are widely used in industry, mobile equipment, aircrafts, ship control, and others.

This text deals with the hydrostatic power systems, which are commonly called *hydraulic power systems*, Figure 1.1 shows the operation principle of such systems.

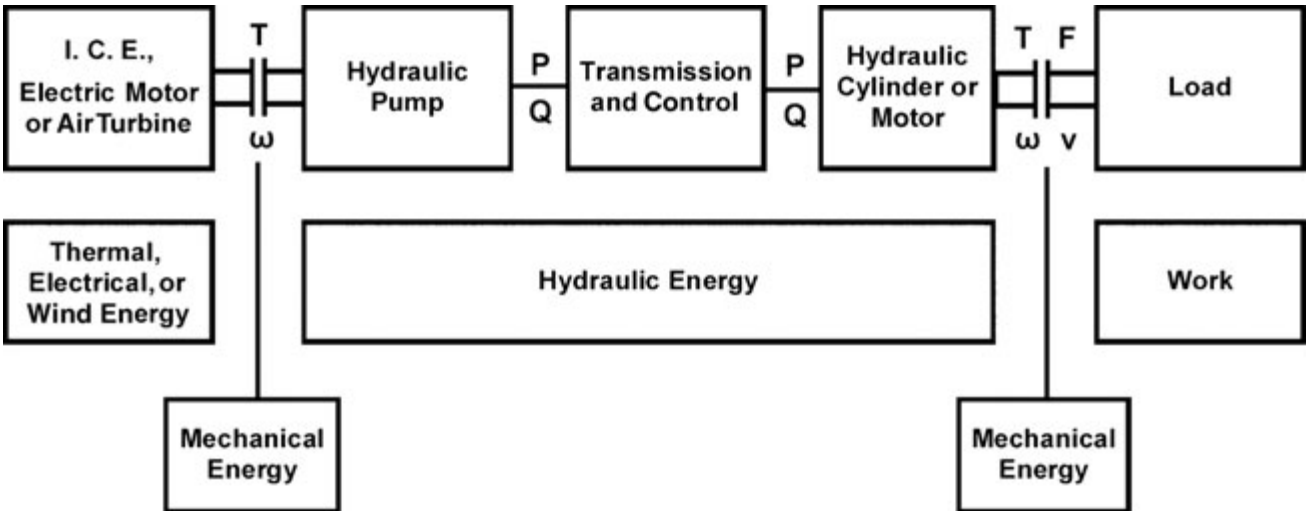

Figure 1.2 Power transmission in a hydraulic power system.

Applications of fluid power:
The applications of stationary hydraulics are as follows:

- **Production and assembly of vehicles of all types.**
  -Machine tools and transfer lines.
  -Lifting and conveying devices.
  -Metal-forming presses.
  -Plastic machinery such as injection-molding machines.
  -Rolling machines.
  -Lifts.
  -Food processing machinery.
  -Automatic handling equipment and robots.

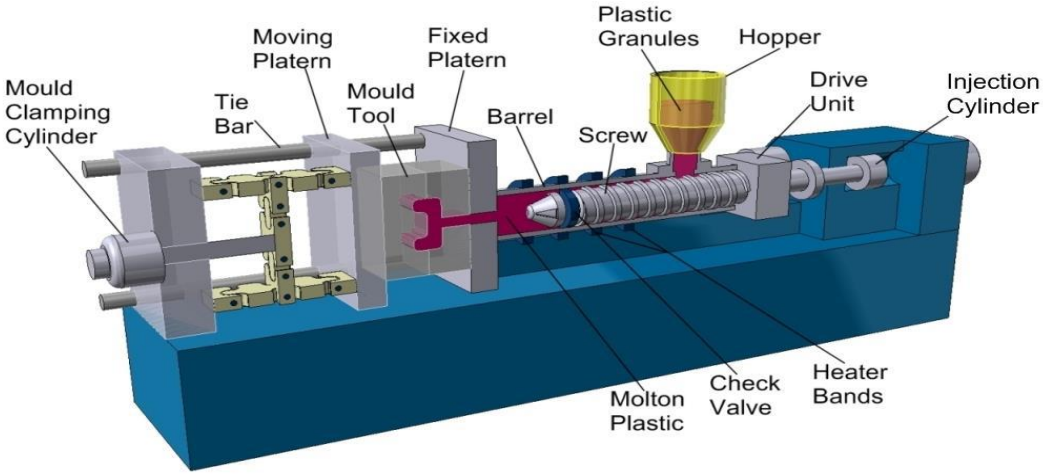

Plastic.machine

hydraulic press machine

- **Mobile hydraulics:**

Mobile hydraulic systems move on wheels or tracks such as a tower crane or excavator truck to operate in many different locations or while moving. A characteristic feature of mobile hydraulics is that the valves are frequently manually operated. The applications of mobile hydraulics are as follows

-Automobiles, tractors, aeroplanes, missile, boats, etc.
-Construction machinery.
-Tippers, excavators and elevating platforms.
-Lifting and conveying devices.
-Agricultural machinery.

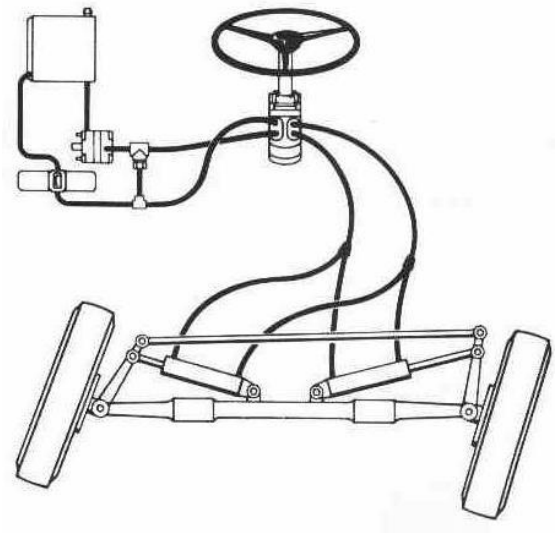

Power steering control system

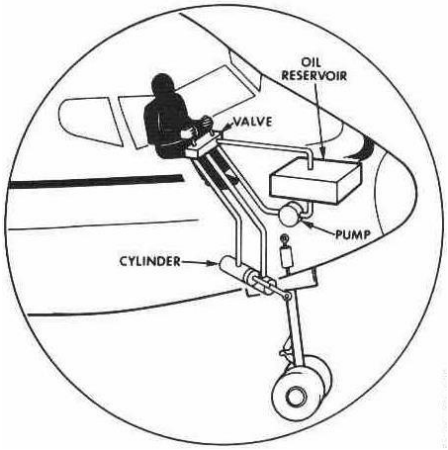

Hydraulic operation of aircraft landing gear

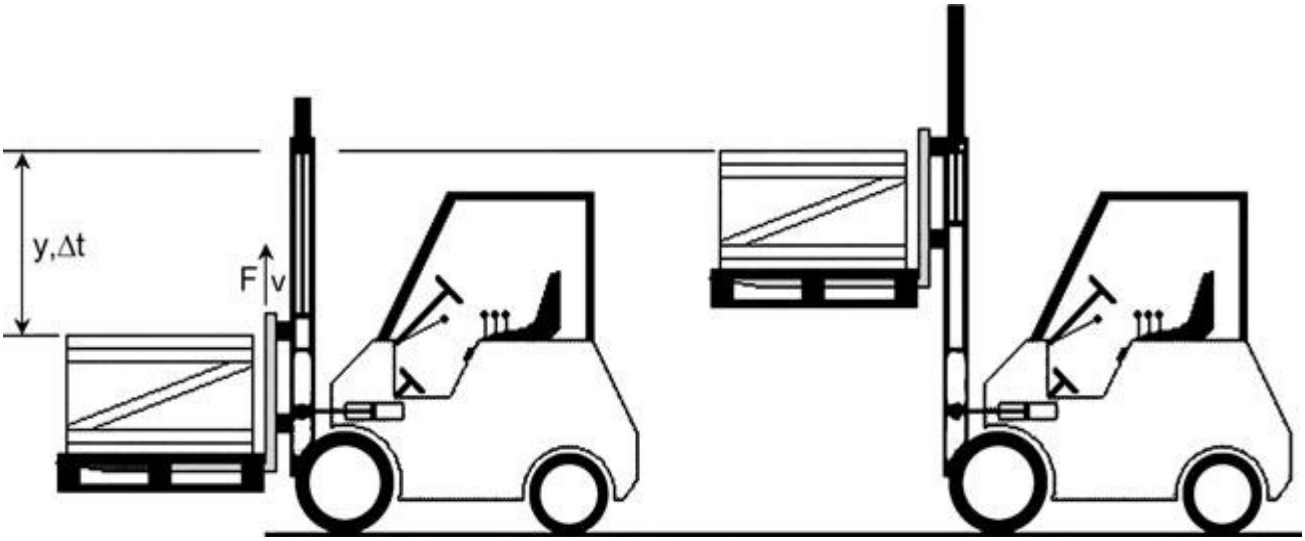

Hydraulic fork lift

Hydraulics and pneumatics have almost unlimited application in the production of goods and services in nearly all sectors of the country. Several industries are dependent on the capabilities that fluid power affords. Table 1.1 summarizes few applications of fluid power.

Table 1.1 More applications of fluid power

Agriculture	Tractors; farm equipment such as mowers, ploughs, chemical and water sprayers, fertilizer spreaders, harvesters
Automation	Automated transfer lines, robotics
Automobiles	Power steering, power brakes, suspension systems, hydrostatic transmission
Aviation	Fluid power equipment such as landing wheels in aircraft. Helicopters, aircraft trolleys, aircraft test beds, luggage loading and unloading systems, ailerons, aircraft servicing, flight simulators
Construction industry/equipment	For metering and mixing of concrete rudders, excavators, lifts, bucket loaders, crawlers, post-hole diggers, road graders, road cleaners, road maintenance vehicles, tippers
Defence	Missile-launching systems, navigation controls
Entertainment	Amusement park entertainment rides such as roller coasters
Fabrication industry	Hand tools such as pneumatic drills, grinders, borers, riveting machines, nut runners
Food and beverage	All types of food processing equipment, wrapping, bottling,
Foundry	Full and semi-automatic melding machines, tilting of furnaces, die-casting machines.
Glass industry	Vacuum suction cups for handling
Hazardous gaseous areas	Hydraulic fracturing technologies: It involves pumping large volumes of water and sand into a well at high pressure to fracture shale and other tight formations, allowing hazardous oil and gas to flow into the well. However, hydraulic fracturing has serious environmental and water pollution related issues.
Instrumentation	Used to create/operate complex instruments in space rockets, gas turbines, nuclear power plants, industrial labs
Jigs and fixtures	Work holding devices, clamps, stoppers, indexers
Machine tools	Automated machine tools, numerically controlled(NC) machine tools
Materials handling	Jacks, hoists, cranes, forklifts, conveyor systems

Medical	Medical equipment such as breathing assistors, heart assist devices, cardiac compression machines, dental drives and human patient simulator
Movies	Special-effect equipment use fluid power; movies such as Jurassic park, Jaws, Anaconda, Titanic
Mining	Rock drills, excavating equipment, ore conveyors, loaders
Newspapers and periodicals	Edge trimming, stapling, pressing, bundle wrapping
Oil industry	Off-shore oil rigs

Paper and packaging	Process control systems, special-purpose machines for rolling and packing
Pharmaceuticals	Process control systems such as bottle filling, tablet placement, packaging
Plastic industry	Automatic injection melding machines, raw material feeding, jaw closing, movement of slides of blow molder

Press tools	Heavy duty presses for bulk metal formation such as sheet metal, forging, bending, punching, etc.
Printing industry	For paper feeding, packaging
Robots	Fluid power operated robots, pneumatic systems
Ships	Stabilizing systems, unloading and loading unit, gyroscopic instruments, movement of flat forms, lifters, subsea inspection equipment
Textiles	Web tensioning devices, trolleys, process controllers
Transportation	Hydraulic elevators, winches, overhead trams
Under sea	Submarines, under sea research vehicles, marine drives and control of ships
Wood working	Tree shearers, handling huge logs, feeding clamping and saw operations

About Forklift

Classified by design

Forklifts come in many shapes and many sizes, they also come in many varieties and fulfill multiple purposes. While some may know forklifts primarily as a material handling appliance, there are in fact many different categories of forklifts. For example a pallet jack is not the same as a three-wheel counterbalance lift truck yet they are both classed as a forklift. Whether you are trying to learn more about these wonderful machines or perhaps hoping to diversify your fleet, here are the seven different categories of forklifts and a breakdown of what they are used for.

1. Counterbalance

– Counterbalance forklifts are the most common trucks used in virtually all material handling capacities.
- Counterbalance forklifts are a straight forward appliance that feature dual forks for heavy loads and bulky items.

2. Three-Wheel Counterbalance

- These forklifts feature three wheels as opposed to four in their counterbalance forerunners.
- Three-wheel counterbalance forklifts are ideal for narrow aisles as they have enhanced manoeuvrability for tight spaces.

3. Reach Trucks

Reach trucks are known for what they are named after, their extended lift height. Reach trucks are optimal in any warehousing situation with high rise storage pallet racking. Reach trucks come in multiple forms, including the Stand-Up truck and Double-Deep truck. According to HST, Stand-Up trucks are the most common and are often used where there's only one load per bay. Double-Deep trucks are similar, but with longer forks, making them perfect for areas where multiple pallet loads are stored in each bay as they will reach right to the back of the bay.

4. Pump Trucks

Pump trucks are considered a bit of a throwback. Pump trucks are primarily used as a pallet jack but do not use any electric power to lift any materials. Instead, pump trucks rely on good old-fashioned manual lab or as the operator "pumps" the jack to lift the skids with their own force.

5. Powered Pallet Trucks

Conversely, the powered pallet truck is a modernized innovation of a pump truck. The powered pallet truck does all the heavy lifting for you! Mirroring functionality of a pump truck, powered pallet trucks are ideal for skids and small packages that need to be stored or transported.

6. Sideloaders

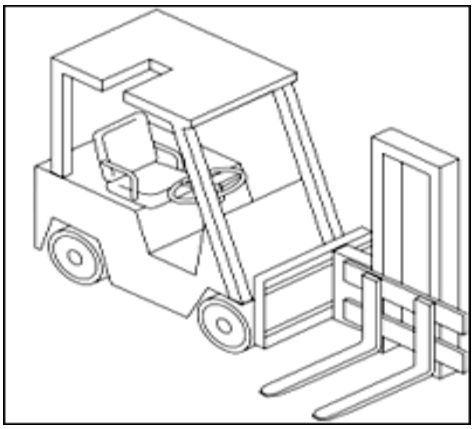

Side loaders are primed to operate in narrow aisles as well. Side lines feature forks which are mounted to the side of the truck and are designed to pick up wide or long loads that would cumbersome to the typical forklift.

Just like many other species of forklift, these to come in various forms. First is the Enclosed Cab that is frequently used outdoors and the Stand-Up which is geared to handle indoor assignments.

7. Teletrucks

Short for telescopic hander forklift, these devices are another option for users that are tasked with high lifting or facilitation of mezzanine storage. These devices are often mistaken for cranes and are able to reach heights and angles that standard lift trucks cannot.

Classified by control method

There are six classes of forklift that describe the fuel option of the forklift and the use. Each forklift operator must be certified to use on each class of forklift that they will operate.

- **Class 1 - Electric Motor Rider Trucks**

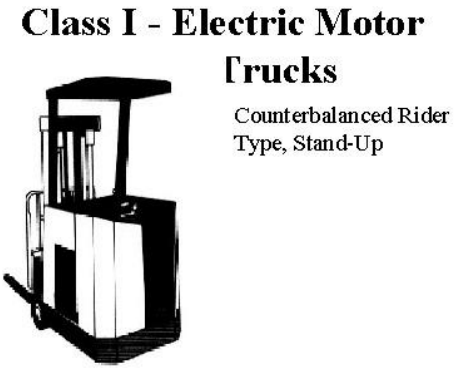

These forklifts can be equipped with either cushion or pneumatic tires. The cushion-tired lift trucks are intended for indoor use on smooth floors. The pneumatic-tired models can be used in dry outdoor applications. These vehicles are powered by industrial batteries and use transistor motor controllers to control travel and hoist functions. These are very versatile and are found from the loading dock to the storage facility. They are generally used in applications where air quality factors need to be considered.

- **Class 2 - Electric Motor Narrow Aisle Trucks**

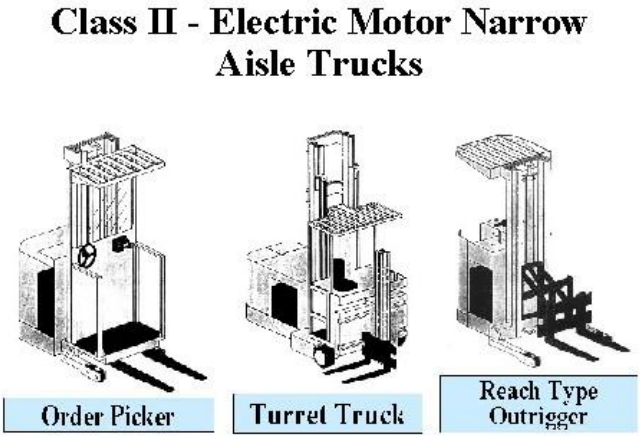

This forklift is for companies that opt for very narrow aisle operation. This allows them to maximize the use of storage space. These vehicles have been developed unique features that are designed to minimize the space occupied by the truck and to improve speed and efficiency.

Class 3 - Electric Motor Hand or Hand-Rider Trucks

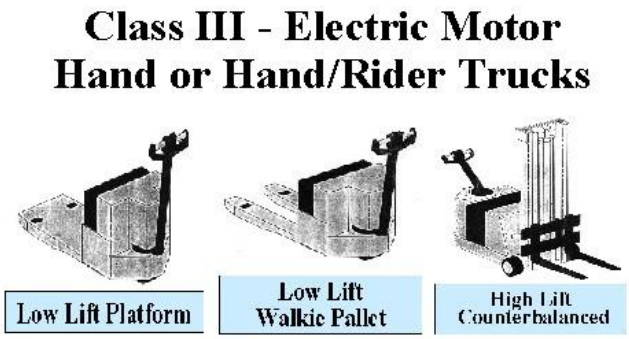

These are hand controlled where the operator is in front of the truck and controls the lift truck through a steering tiller. All controls are mounted on the top of the tiller and the tiller is moved side to side to steer the truck.

These vehicles are battery powered with the smaller capacity units using industrial batteries.

- ## Class 4 - Internal Combustion Engine Trucks - Cushion Tires

Fork, counterbalanced (cushion/solid tires)

These forklifts are used inside on smooth dry floors for transporting palletized loads to and from the loading dock and the storage area. The cushion tired forklifts are lower to the ground than pneumatic tired forklift truck. This allows cushion tired forklift trucks more useful in low clearance applications.

- ## Class 5 - Internal Combustion Engine Trucks - Pneumatic Tires

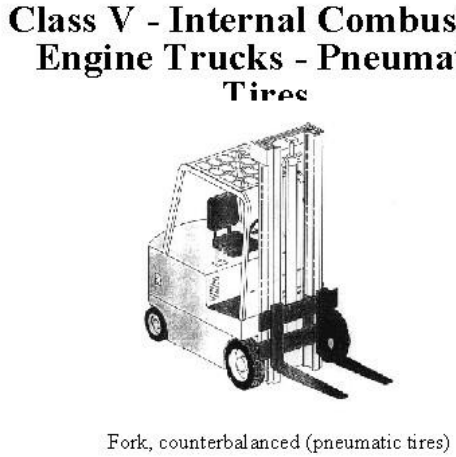

Fork, counterbalanced (pneumatic tires)

These trucks are most commonly seen in warehouses. They can be used either inside or outside and used in virtually any type of application. Because of the large capacity range of this series of lift truck, they can be found handling small single pallet loads to loaded 40-foot containers.

These lift trucks can be powered by internal combustion engines and are available for use with LPG, Gasoline, Diesel, and Compressed Natural Gas fuel systems.

- **Class 6 - Electric and Internal Combustion Engine Tractors**

Sit-down rider

These vehicles are versatile and can be used in a variety of applications.

They can be equipped with either internal combustion engines for outdoor use or battery powered electric motors for indoor use.

About smart design:

Transportable forklift is gaining increasing importance in a broad range of

applications. In addition to classic "Power-Liner"

1- Safe on the road, Rapidly operational, Reliable on the job and Affordable to maintenance.
2- Flexibility & Speed in operation and road safety.
3- Safety & Durability combined with flexibility make the forks unbeatable.
4-Versatile Applications.

- Transporting of building materials.
- All-wheel drive and articulated steering result in best off-road capability.
- Unloading from one side – no problem.
- Perfectly precise delivery of swimming pools.
- Fire department and recovery operations.

5- Customized Solutions – Different Performance & Installation Versions.

A transportable truck is opening up new areas of applications this innovative model stands out by virtue of ch/s and advantages which no other forklift can offer. It's ready for use in tiny time any time and with hardly any efforts, in a short time with a few steps the forklift is ready to work, after the remote control is activated and the AC motor is started up, the operation is done by a remotely controlled joystick, The transmission is done over a differential powered by a hydraulic motor.

The standard lift frame reaches a high of (1600 mm) and the lifting capacity of (350 kg), this frame can be stored over the front axles for transport, this results saving the center of gravity (Balance stability and Drivability).

Joint steering gives the machine great maneuverability, the lateral movement of the forks is controlled by the joint steering, by that it made possible to pull out an obstructed plate.

It opens new logistic applications and offers economical movement of goods.